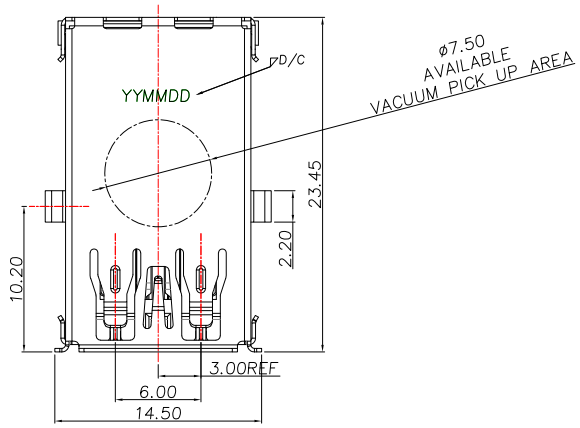

SUA-210EHS1-31x-S277

COLOR :

BLUE : Blank
Black : B
White : W

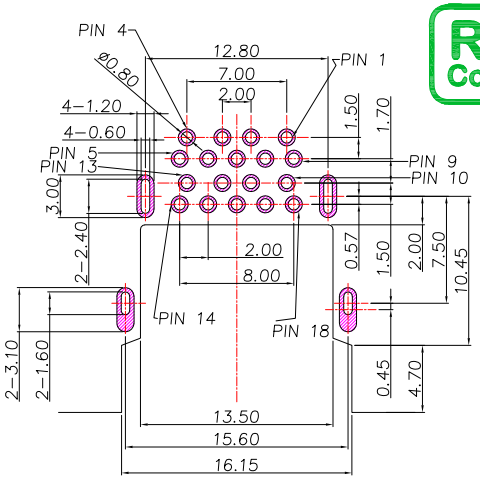

RoHS Compliant

PCB LAYOUT
TOP VIEW

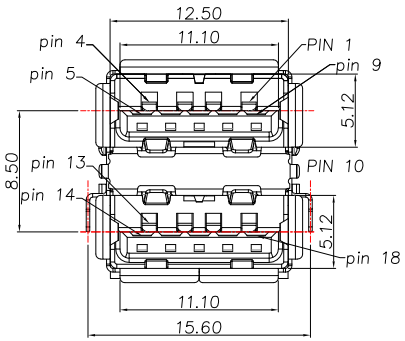

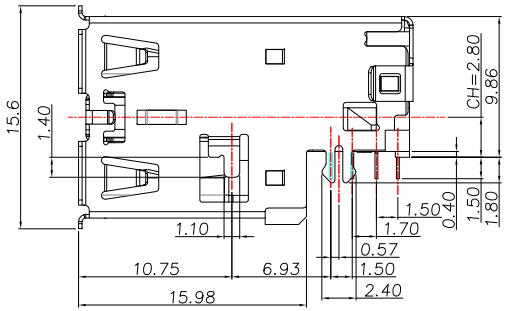

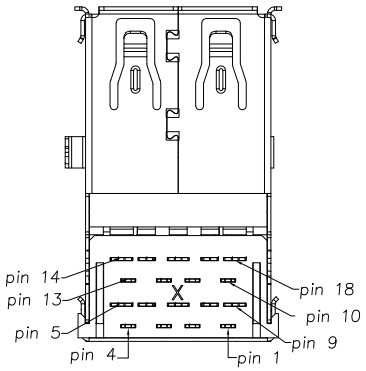

NOTE:

1.MATERIAL:

1.1 Housing: LCP

1.2 Cover: LCP,Black

1.3 Contact: 4PIN-Phosphor Bronze

5PIN-Brass

1.4 Shell: SUS

2.Finish:

2.1 Contact: Plated Gold in Mating Area ;

Tin Plated on Solder Balls ;

Nickel under plated overall

2.2 Shell: Nickel under Plated surface layer

3.SPECIFICATION:

3.1 Rating: 30V , 1.8A(pin1&4) ; 0.25A(other pin)

3.2 Insulator Resistance:100MΩ Min

3.3 Dielectric Strength: 100V AC

3.4 Contact Resistance: 30mΩ Max

ITEM NO.	DESCRIPTION	DRAWN	DATE

CONTACT 建倚科技股份有限公司 CONTACT TECHNOLOGY CORP.

TOLERANCE UNLESS OTHERWISE STATED : Up to 5 ±0.2; Above 5 ~ 15 ±0.3; Above 15 ~ 30 ±0.4; Above 30 ~ 50 ±0.5; Angle ±0.3°

3RD. ANGEL'S | UNITS MM

DRAWN BY: Jack Lu	DATE 06/24/25	MAT'L		TITLE	CONNECTOR		
CHECKED BY: Jacky Chen	DATE 06/24/25	FINISH		MODLE	USB AF 3.1 雙層沉板反向 DIP 90 度 L23.45		
APPROVED BY: Tony Kao	DATE 06/24/25	SCALE	1 : 1	DWG NO.	SUA-210EHS1-31x-S277	SIZE	A4
		SHEET NO.	1 of 1	PART NO.	SUA-210EHS1-31x-S277	VER	R